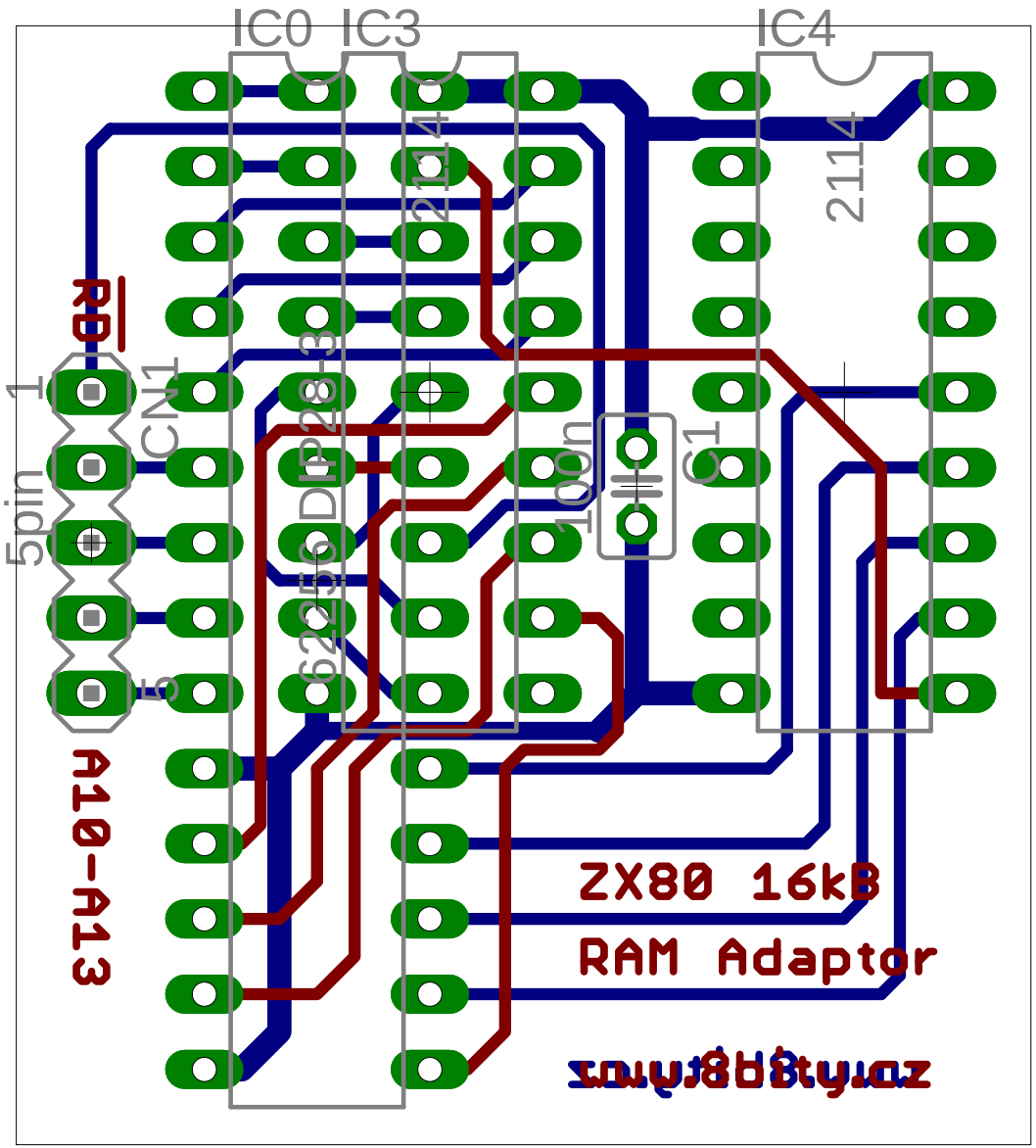

18.12.2011 16:31:58 f=4.00 C:\Users\Kiwi\Documents\Eagle\ZX80_RAM_Adaptor_v1a\ZX80_RAM_Adaptor_v1a.brd