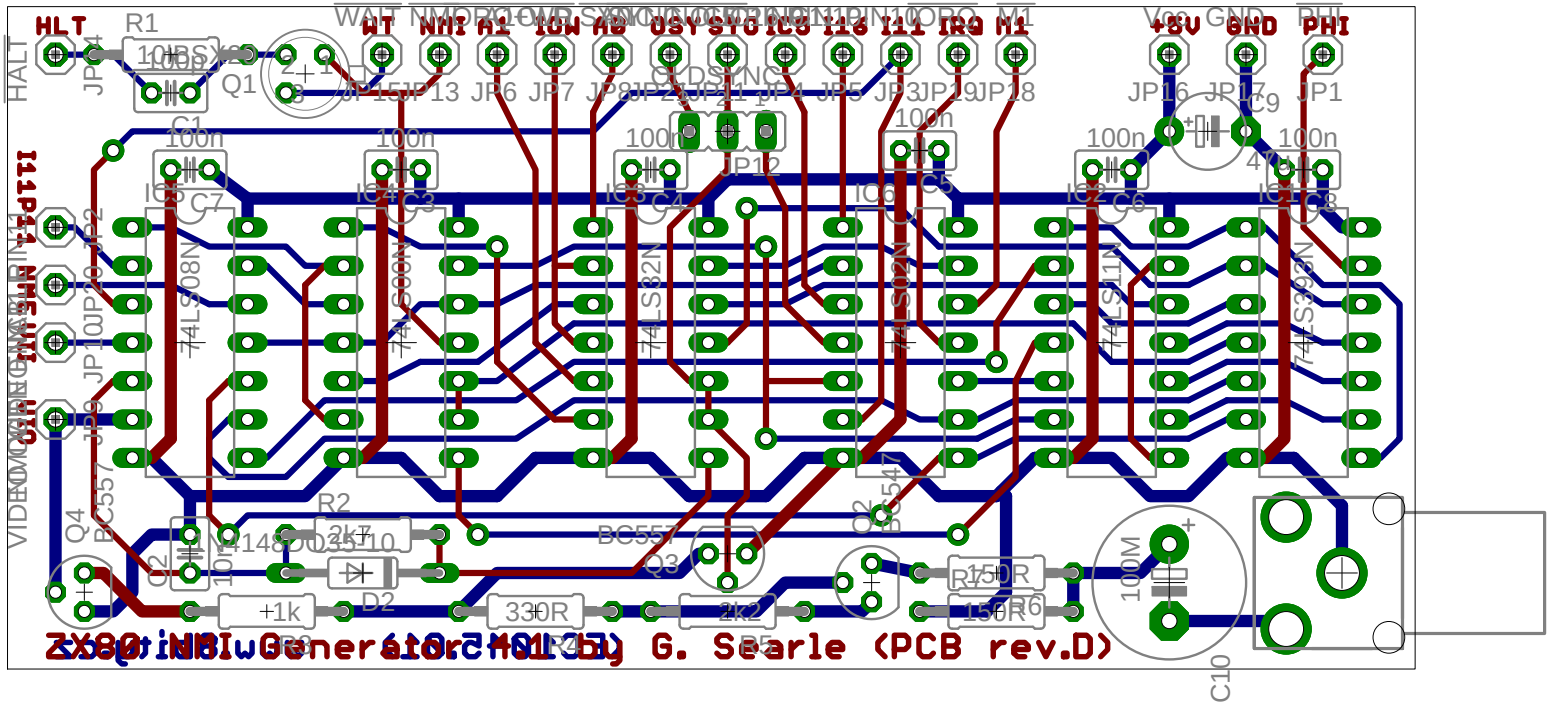
HLT
WAIT
NMI
A1
IOW
A0
OSY
SYO
IC0
I16
I11
IRQ
M1
+5V
GND
PHI
ZX80 NMI Generator (PCB rev.D)
by G. Searle (PCB rev.D)