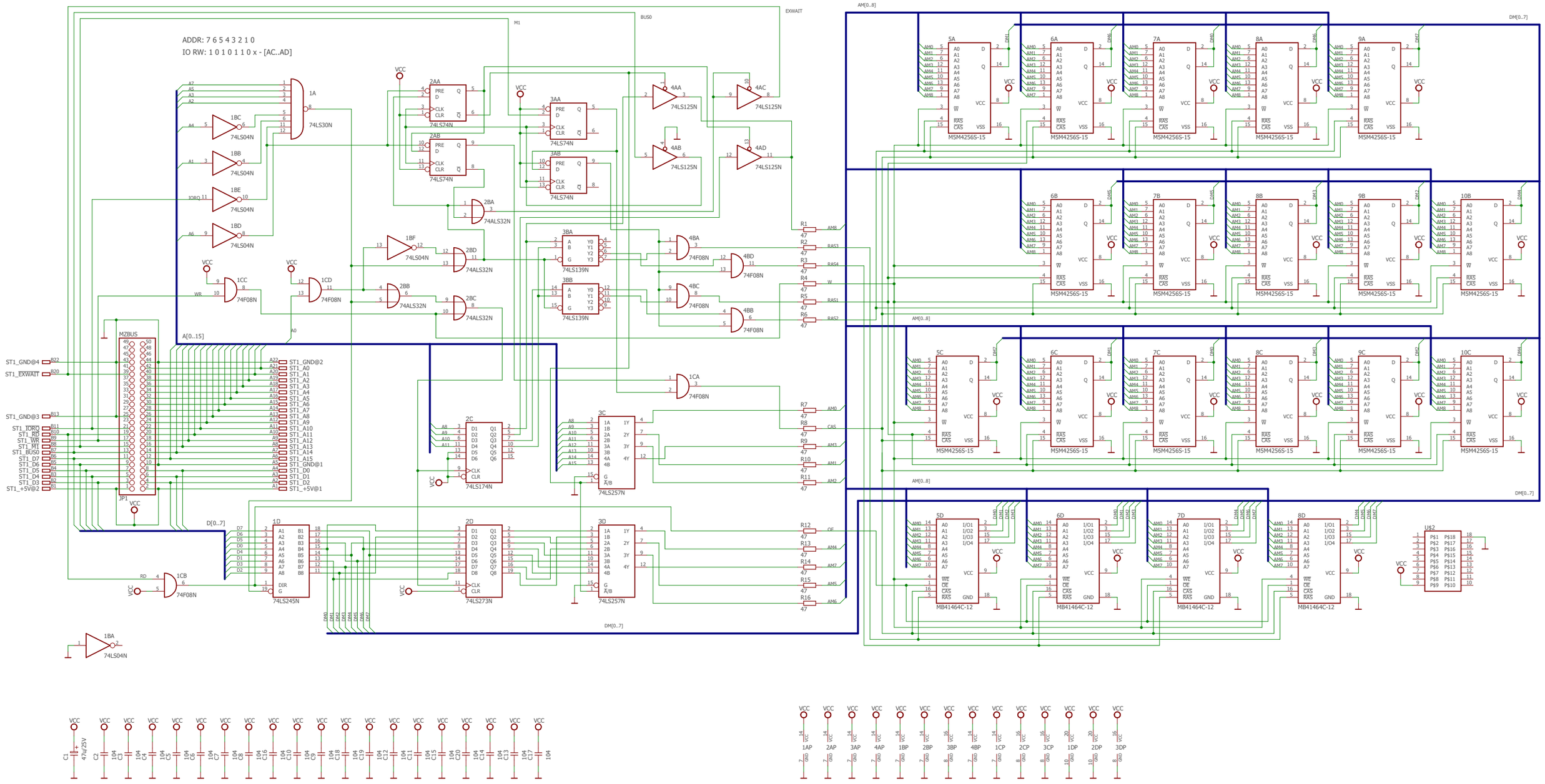








29.04.2018 9:10 f=0.62 E:\History\Sharp\MZ-1R37\dps\MZ-1R37.sch (Sheet: 1/1)