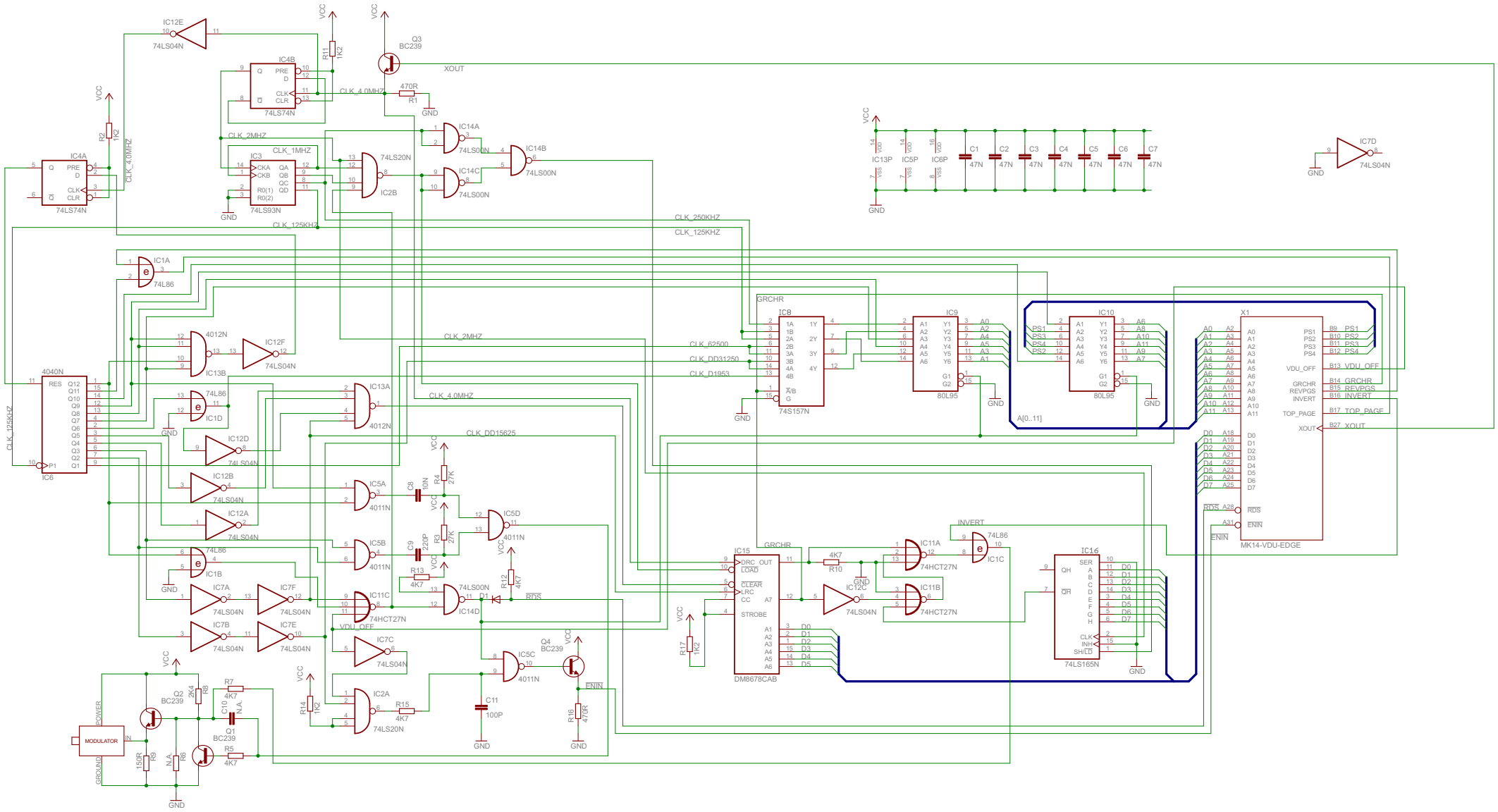

31.1.2015 20:26:57 f=0.55 C:\Users\Kiwi\Documents\eagle\MK14_VDU\MK14_VDU.sch (Sheet: 1/1)