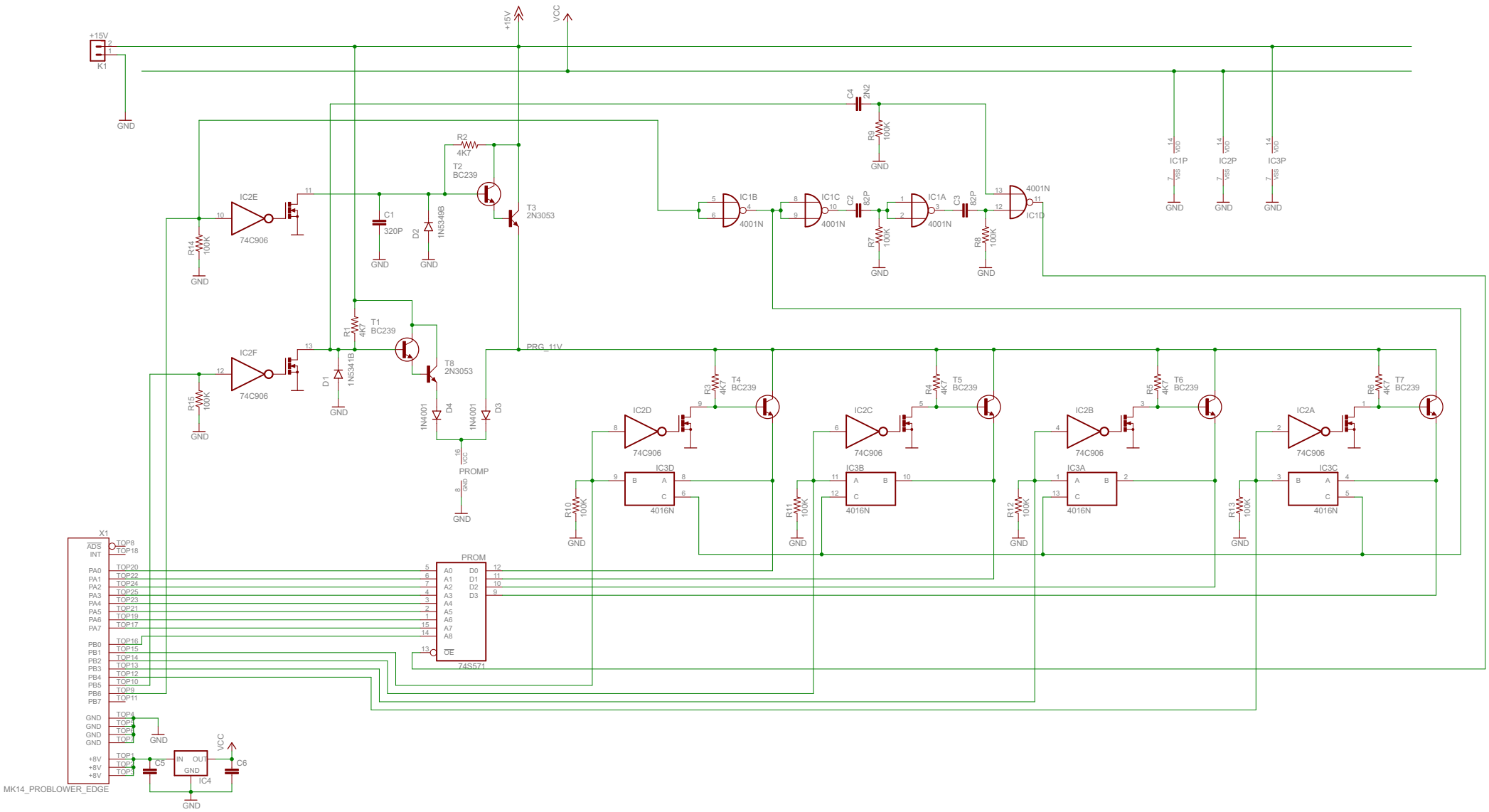

31.1.2015 19:13:57 f=0.60 C:\Users\Kiwi\Documents\Eagle\MK14_PROM_Blower\MK14_PROM_Blower.sch (Sheet: 1/1)