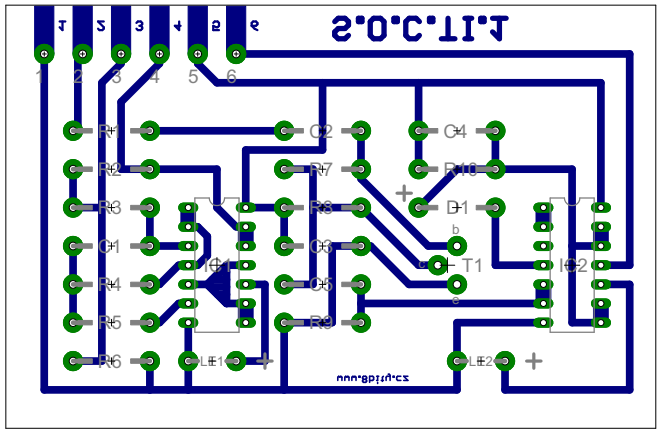

31.1.2015 20:02:45 C:\Users\Kiwi\Documents\eagle\MK14_Cassette_Interface\MK14_Cassette_Interface.brd