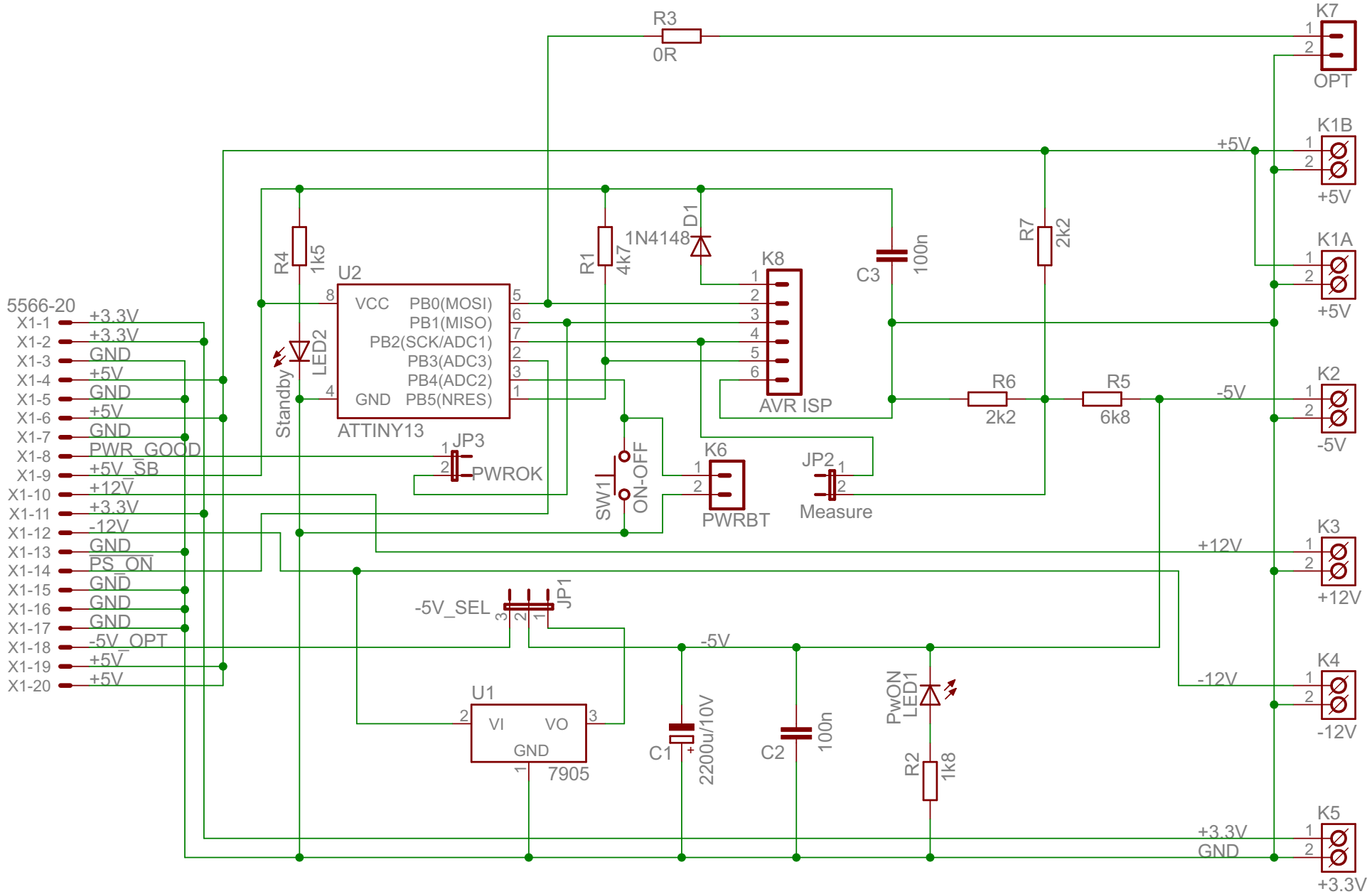

22.7.2013 20:56:12 f=1.40 C:\Users\Kiwi\Documents\eagle\8bity_ATX_adapter\8bity_ATX_adapter_2013-07-22.sch (Sheet: 1/1)